Raindance Select S
Showerpipe 240 1jet P with thermostat
Surfaces: **Chrome** Article Number: **27633000**

Description

product features

- consists of: overhead shower, hand shower, shower thermostat, shower hose, slider
- maximum flow rate at 0.3 MPa: 16 l/min
- overhead shower Raindance S240 P
- shower head size: 240 mm
- spray type: PowderRain
- flow rate PowderRain (at 3 bar): 16 l/min
- operating pressure: min. 0.15 MPa/max. 1.0 MPa
- fully chrome-plated spray disc
- shower arm length: 460 mm
- swivel shower arm
- thermostat Ecostat Comfort
- safety lock at 40° C
- adjustable hot water limitation
- outlets controlled via turning handle
- installation type: exposed installation
- connection dimension DN15
- connection thread G ½
- centre distance 150 ± 12 mm
- height-adjustable hand shower holder
- rising pipe can be shortened in height

Technology

Product image

Scale drawing

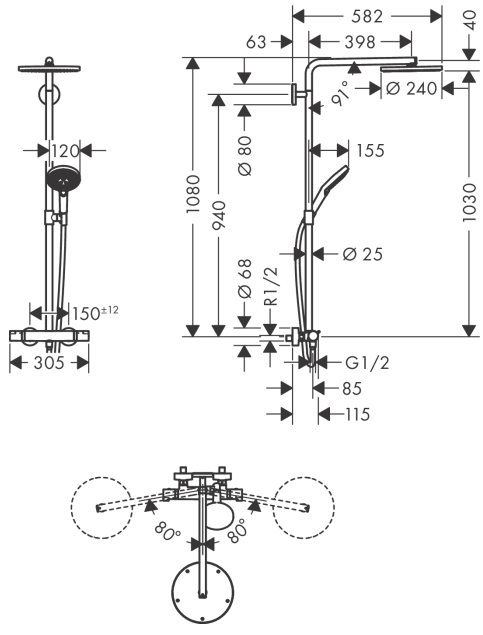

Raindance Select S
Showerpipe 240 1jet P with thermostat
Surfaces: **Chrome** Article Number: **27633000**
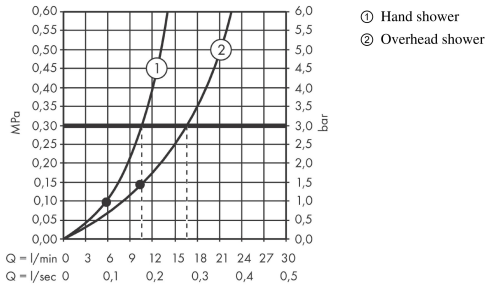
Flowchart