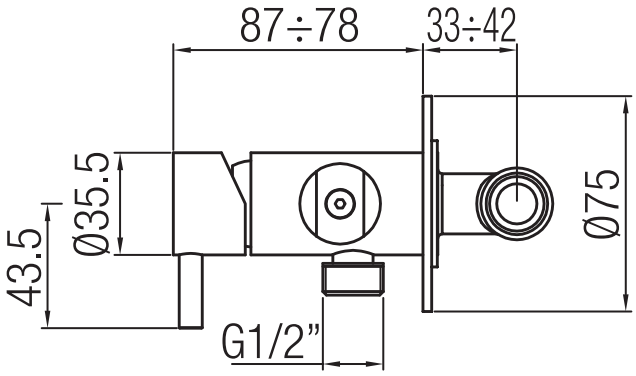
87÷78
33÷42
Ø35.5
43.5
Ø75
G1/2”

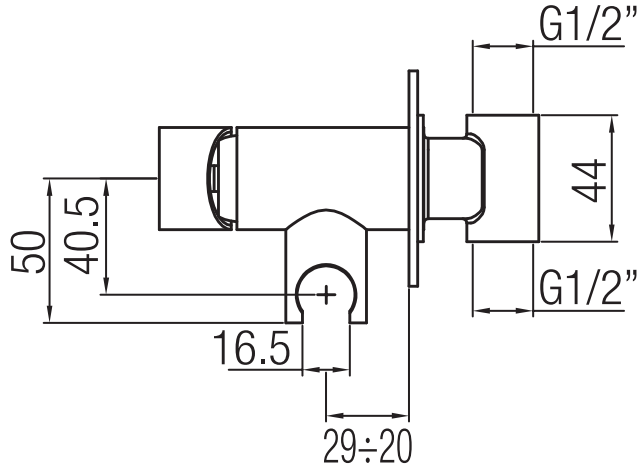
G1/2”
44
50
40.5
G1/2”
16.5
29÷20

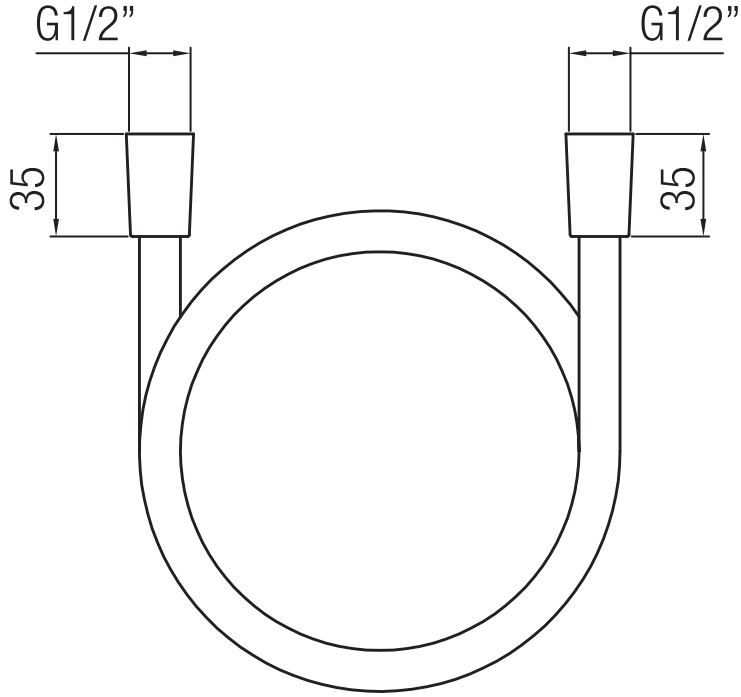
G1/2”
G1/2”
35
35

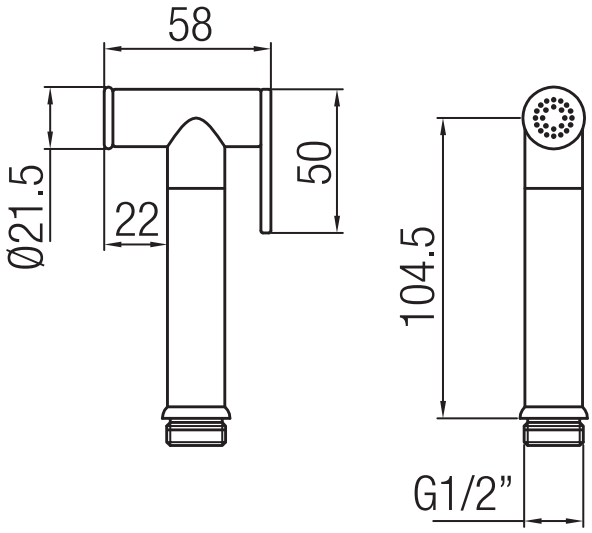
58
Ø21.5
22
50
104.5
G1/2”